EE 8 – EE 32 Horizontal

The coilformers are made in gfr Polyamide PA66 of type p6g (RTI long-range temperature +125° C) or in gfr Liquid Crystal Polymer LCP of type Zen.6130L,sw (RTI long-range temperature +240° C).
Pin material is tin bronze, tinned for solder-pins and brass, tinned for solder-tags.
Special materials – e.g. irradiated cross-linked – and designs on request, dimensions in mm/inch.

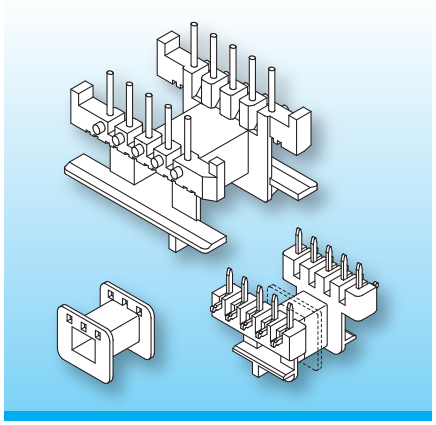

This group of horizontal coilformers is sorted by ferrite core / lamination size and each by pinning with straight pins, side-wrapping pins, solder-tags and conventional coilformers.
Most designs feature terminal strips with “noses” which provide tension-relief of the winding wires and “stand-offs” which allow clean soldering of the coilformer onto the pcb to minimize cold-solder joints. Some coilformers also feature extended flanges to prevent clips sliding off.

Type	Order-Code		Accessories
Coilformer: EE 16/1k/a5-6/3.75-c(12.5)/p6g	N0099-024	on request	Potting Box EE 16
Coilformer: EE 16/2k/5-6/3.75-c(12.5)/p6g	92062-024		Snap-on Potting Box EE16
Coilformer: EE 16/1k/a5-6/3.75-c(12.5)/Zen.6130L,sw	N0099-243	on request	Spring-Clip SB-EF 16
Coilformer: EE 16/2k/5-6/3.75-c(12.5)/Zen.6130L,sw	92062-243		
Solder-pin: z608/ua	73264-212		

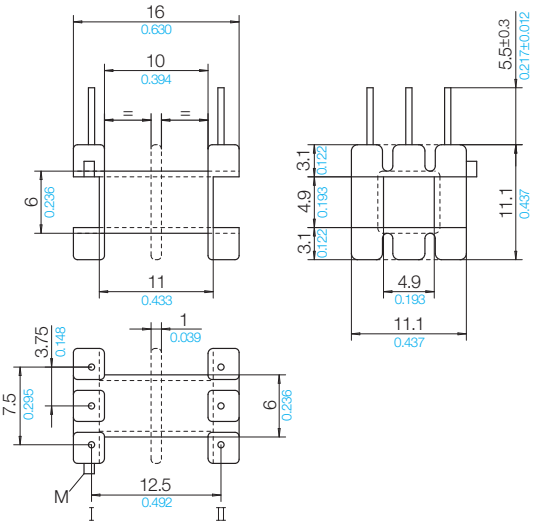

Grid
View pin-side

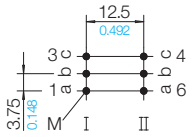

Material: p6g => max. solder temperature 250° C
Material: Zen.6130L,sw => max. solder temperature 350° C

© 06/2025 by NORWE GmbH

All dimensions in mm/inch

The permissible deviations according to DIN 16901 apply as tolerances

Warranties:
refer to Terms and Conditions of Sale

Valid version of data sheet online

QR Online-Version

NORWE GmbH
Paulstraße 5, Pernze
51702 Bergneustadt
Deutschland
Telefon +49 (0) 27 63-807-0
E-mail verkauf@norwe.de
Internet www.norwe.de
www.norwe.eu

NORWE Inc.
P.O. Box 25 11
North Canton, OH 44720-0511
United States of America
Telefon +1-330 497-8113
E-mail usa@norwe.com
Internet www.norwe.com